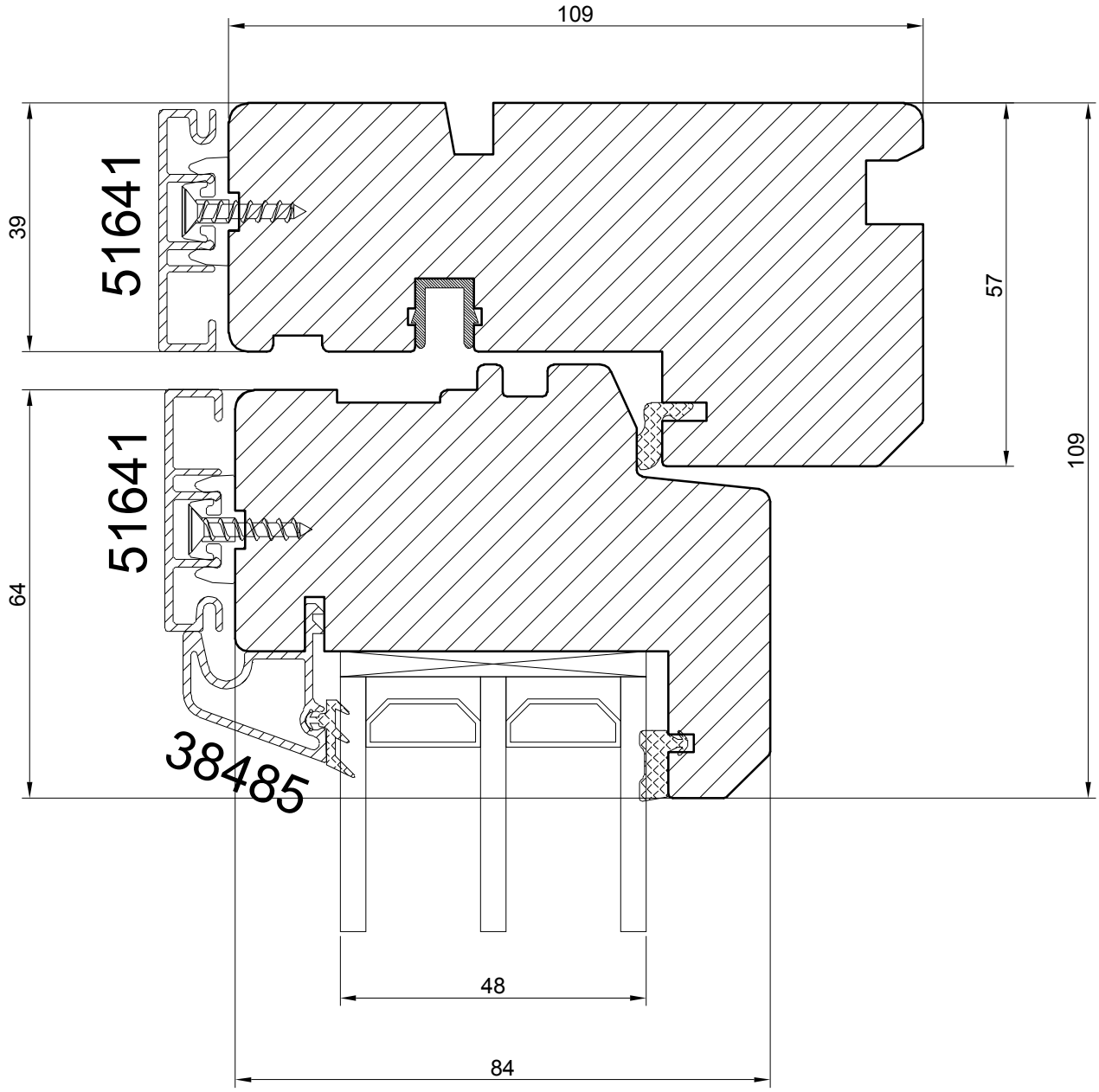

REVERSIBLE PASSIVE WINDOW WITH ALU CLAD

NORWOOD SP.ZO.O.
Ul. Rataja 6, Rusocin
83-031 Łęgowo
+48 692 22 00
biuro@norwood.pl

Description	HSSPA N109 REVERSIBLE WINDOW HEAD SECTION (48 mm glass)			
Revis.	Date	Size 1 : 1	Drw.	Date 02.01.2018
Verif.	Date	Drawing n. HSSPA - 48 - he - 01		

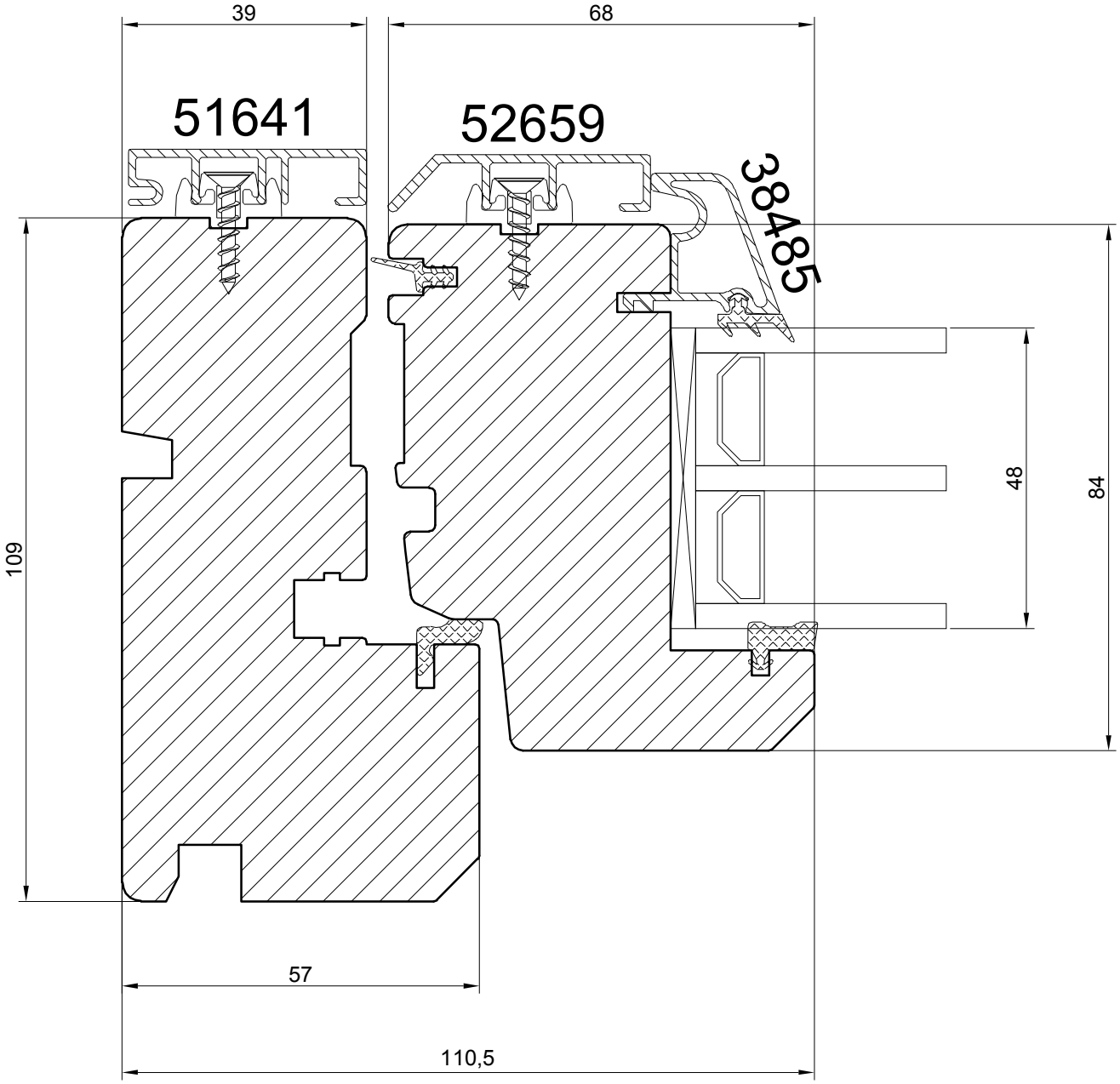

REVERSIBLE PASSIVE WINDOW WITH ALU CLAD

NORWOOD SP.ZO.O.
Ul. Rataja 6, Rusocin
83-031 Łęgowo
+48 692 22 00
biuro@norwood.pl

Description	HSSPA N109 REVERSIBLE WINDOW JAMB SECTION hinge side (48 mm glass)				
Revis.	Date	Size 1 : 1	Drw.	Date 02.01.2018	
Verif.	Date	Drawing n. HSSPA - 48 - seh - 01			

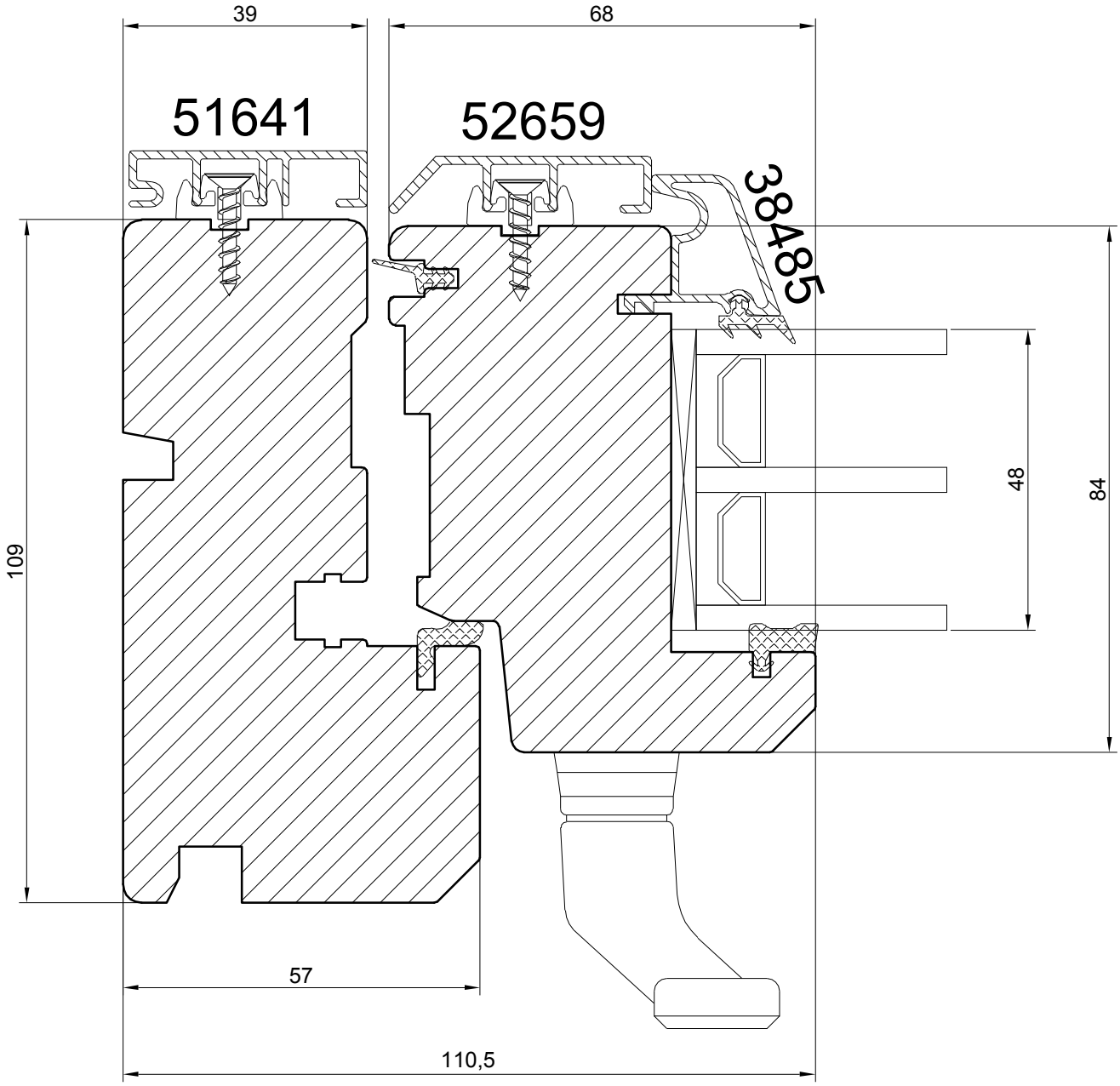

REVERSIBLE PASSIVE WINDOW WITH ALU CLAD

NORWOOD SP.ZO.O.
Ul. Rataja 6, Rusocin
83-031 Łęgowo
+48 692 22 00
biuro@norwood.pl

Description	HSSPA N109 REVERSIBLE WINDOW JAMB SECTION handle side (48 mm glass)				
Revis.	Date	Size 1 : 1	Drw.	Date	02.01.2018
Verif.	Date	Drawing n.	HSSPA - 48 - sel - 01		

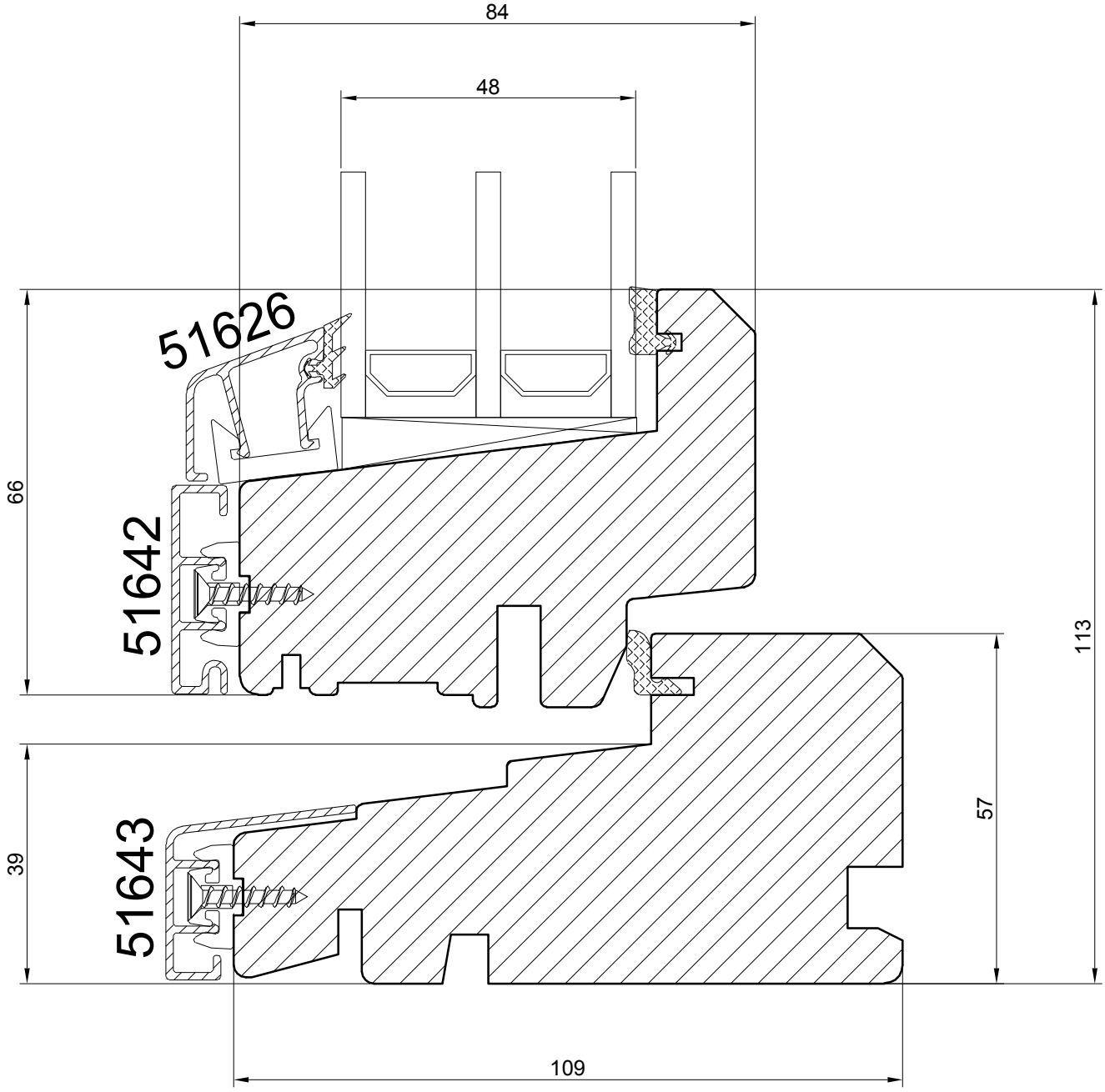

REVERSIBLE PASSIVE WINDOW WITH ALU CLAD

NORWOOD SP.ZO.O.
Ul. Rataja 6, Rusocin
83-031 Łęgowo
+48 692 22 00
biuro@norwood.pl

Description	HSSPA N109 REVERSIBLE WINDOW SILL SECTION (48 mm glass)				
Revis.	Date	Size 1 : 1	Drw.	Date	02.01.2018
Verif.	Date	Drawing n.	HSSPA - 48 - sl - 01		

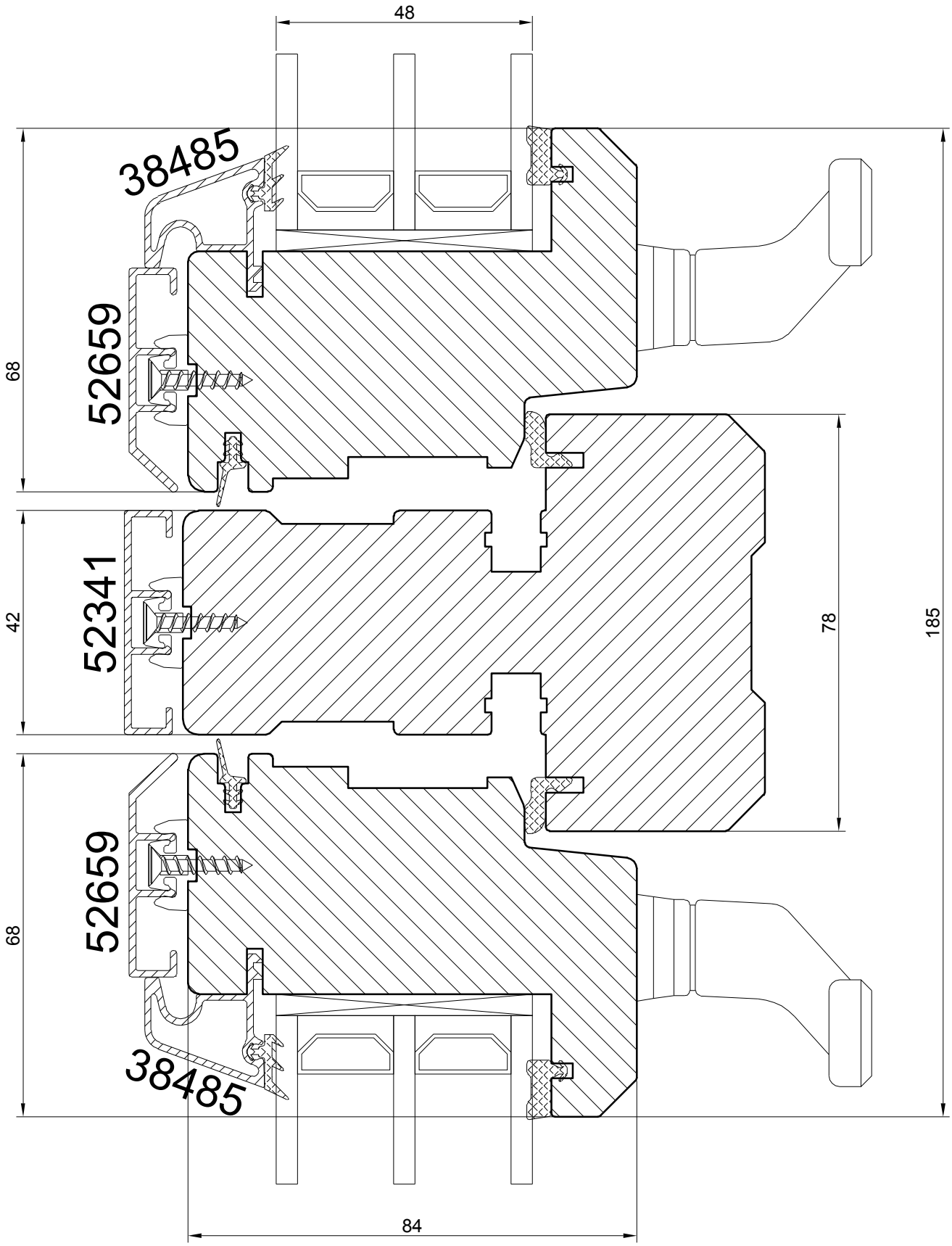

REVERSIBLE PASSIVE WINDOW WITH ALU CLAD

NORWOOD SP.ZO.O.
Ul. Rataja 6, Rusocin
83-031 Łęgowo
+48 692 22 00
biuro@norwood.pl

Description	HSSPA N109 REVERSIBLE WINDOW MULLION (48 mm glass)				
Revis.	Date	Size 1 : 1	Drw.	Date	02.01.2018
Verif.	Date	Drawing n.	HSSPA - 48 - ml - 01		

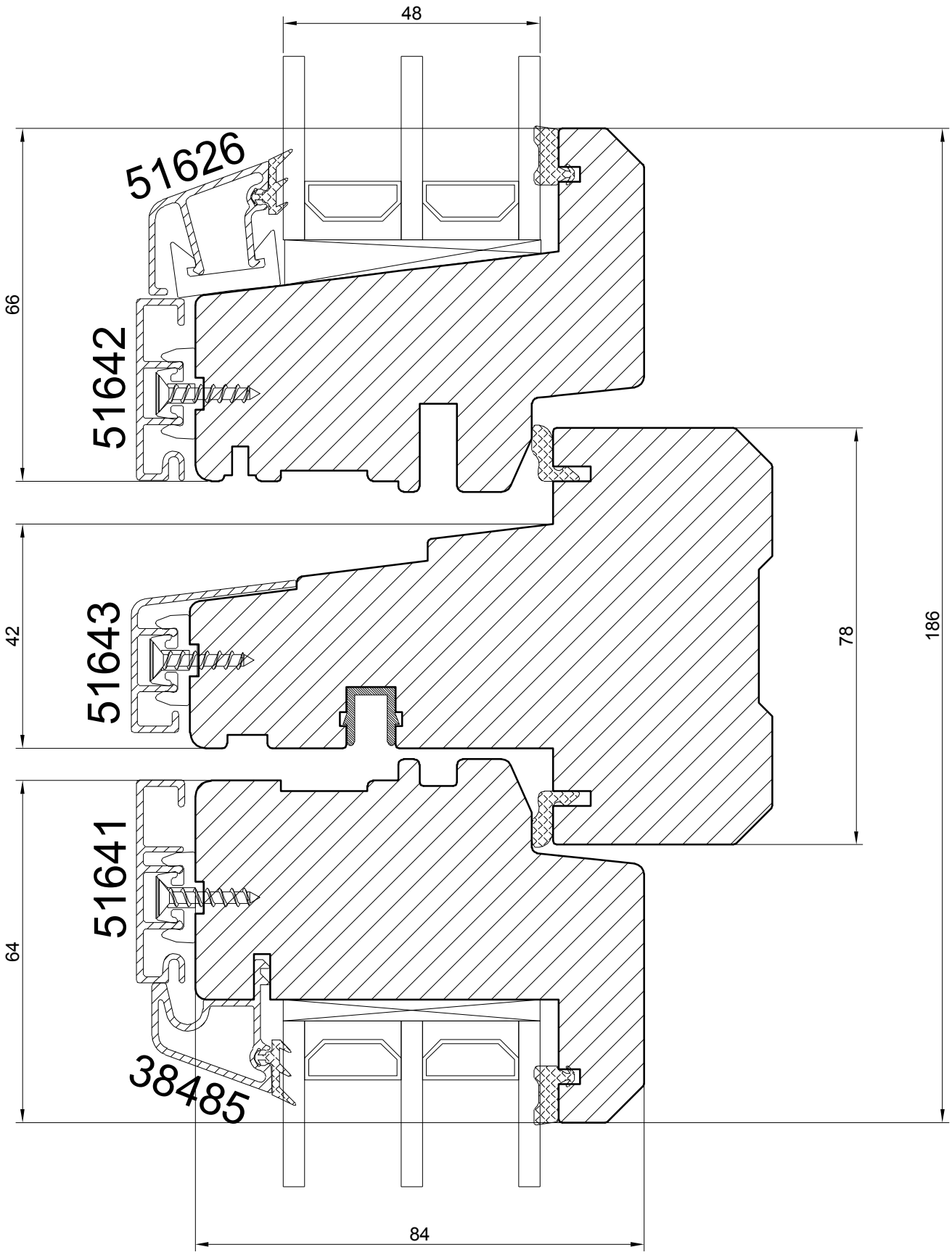

REVERSIBLE PASSIVE WINDOW WITH ALU CLAD

NORWOOD SP.ZO.O.
Ul. Rataja 6, Rusocin
83-031 Łęgowo
+48 692 22 00
biuro@norwood.pl

Description	HSSPA N109 REVERSIBLE WINDOW TRANSOM (48 mm glass)				
Revis.	Date	Size 1 : 1	Drw.	Date	02.01.2018
Verif.	Date	Drawing n.	HSSPA - 48 - ts - 01		

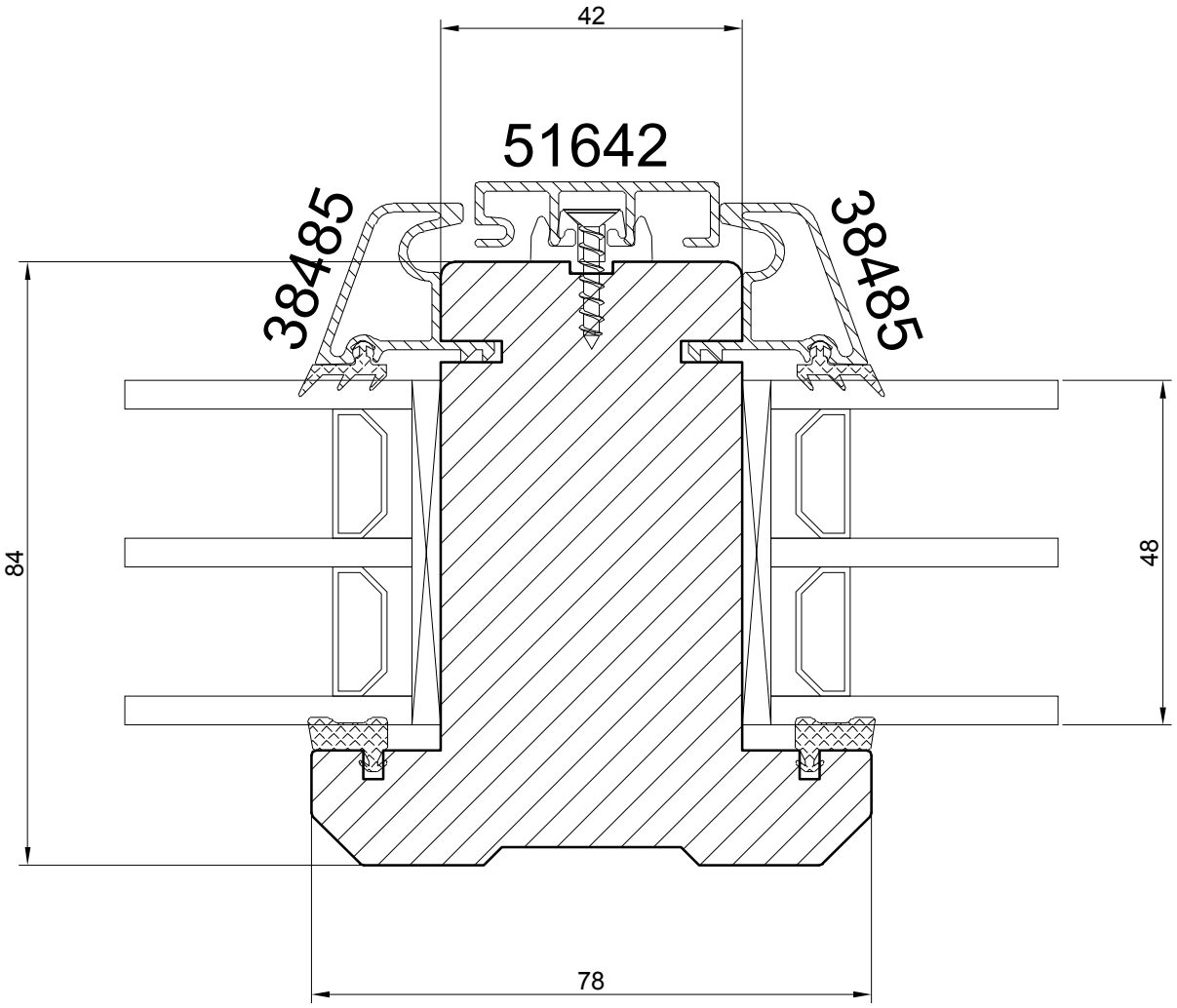

REVERSIBLE PASSIVE WINDOW WITH ALU CLAD

NORWOOD SP.ZO.O.
Ul. Rataja 6, Rusocin
83-031 Łęgowo
+48 692 22 00
biuro@norwood.pl

Description	HSSPA N109 REVERSIBLE WINDOW VERTICAL BAR 78 (48 mm glass)				
Revis.	Date	Size 1 : 1	Drw.	Date	02.01.2018
Verif.	Date	Drawing n.	HSSPA - 48 - vs78 - 01		

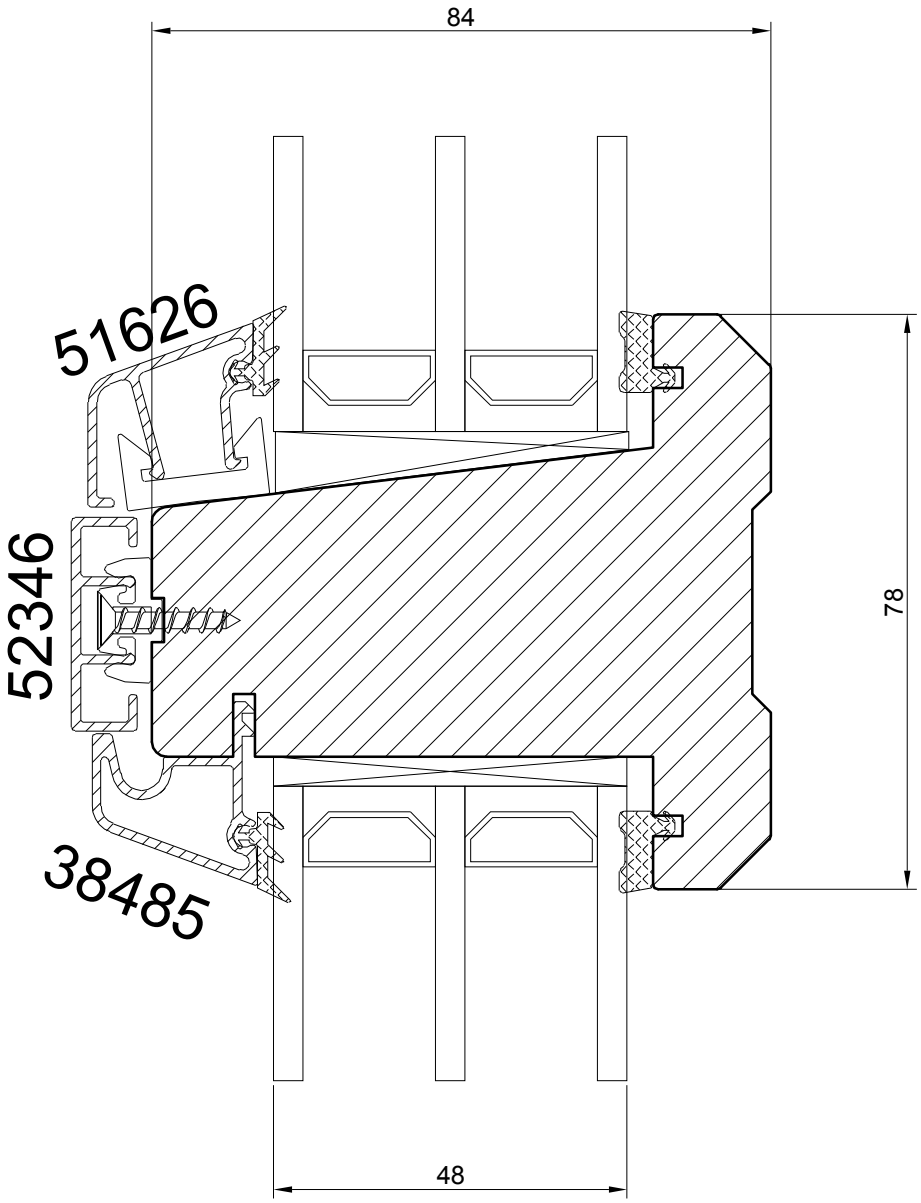

REVERSIBLE PASSIVE WINDOW WITH ALU CLAD

NORWOOD SP.ZO.O.
Ul. Rataja 6, Rusocin
83-031 Łęgowo
+48 692 22 00
biuro@norwood.pl

Description	HSSPA N109 REVERSIBLE WINDOW HORIZONTAL BAR 78 (48 mm glass)				
Revis.	Date	Size 1 : 1	Drw.	Date 02.01.2018	
Verif.	Date	Drawing n. HSSPA - 48 - hs78 - 01			